FEMALE END VIEW	MALE END VIEW	WIRING DIAGRAM

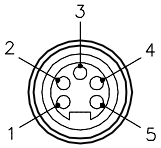

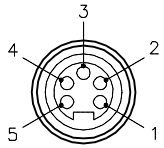

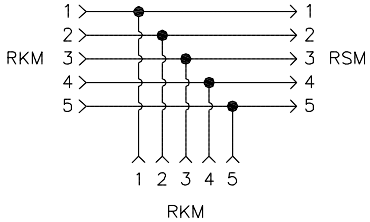

SPECIFICATIONS

CONTACT CARRIER MATERIAL/COLOR	TPU/BLUE-GRAY
MOLDED HEAD MATERIAL/COLOR	TPU/BLUE-GRAY
CONTACT MATERIAL/PLATING	BRASS/GOLD
COUPLING NUT MATERIAL/PLATING	BRASS/NICKEL
RATED CURRENT [A]	9.0 A
RATED VOLTAGE [V]	250 V
TEMPERATURE RATING	+80°C
PROTECTION CLASS	MEETS NEMA 1,3,4,6P AND IEC IP67

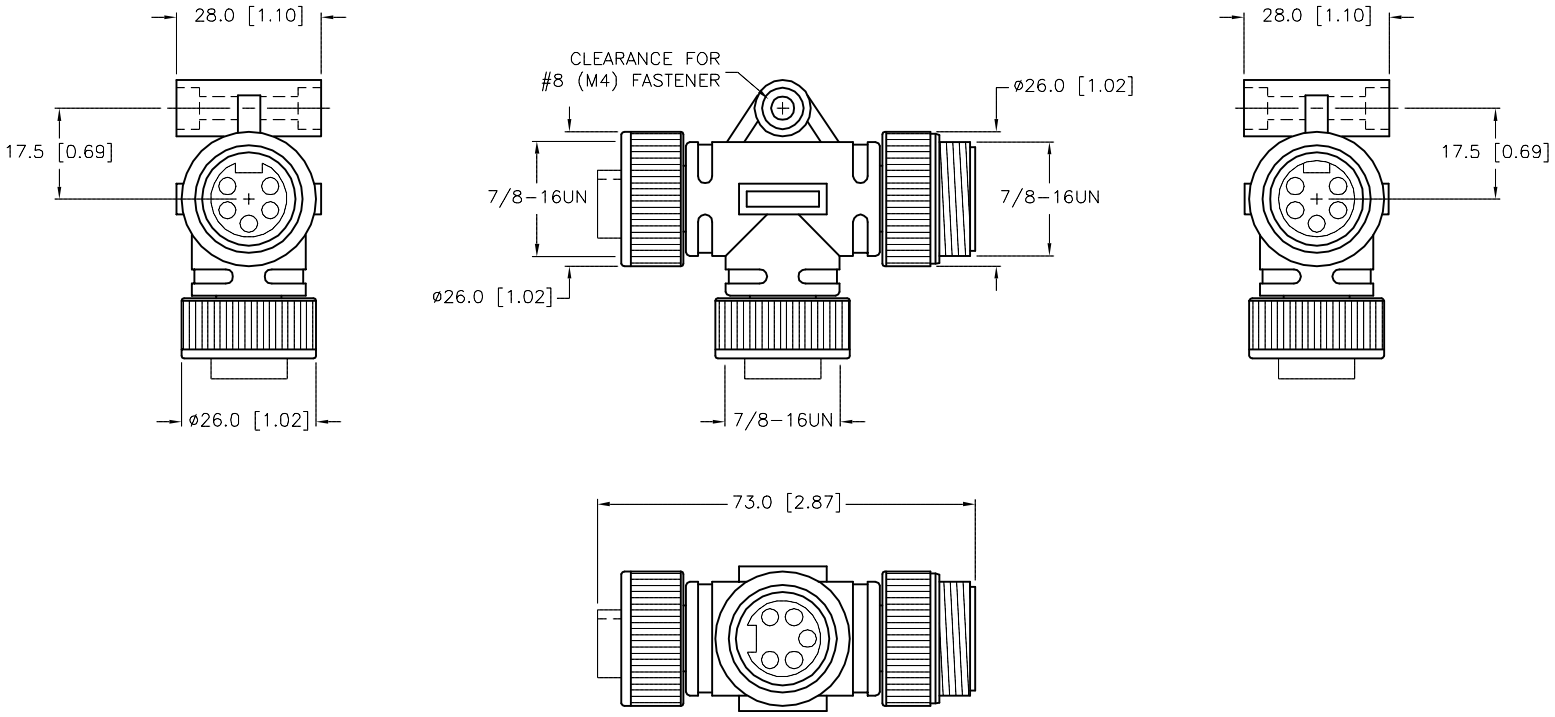

SOURCE DRAWING - FOR REFERENCE ONLY

NOTES:

1. "KF" DESIGNATES KEYWAY OF DROP CONNECTOR FACES TOWARD THE FEMALE CONNECTOR.

REV	DESCRIPTION	BY	DATE	ECO NO.
F	UPDATED NOTES PER ECO	TV	03/25/16	54141

RELATED DOCUMENTS
1.
2.
3.
4.

MATERIAL

FINISH

3RD ANGLE PROJECTION

ALL DIMENSIONS DISPLAYED ON THIS DRAWING ARE FOR REFERENCE ONLY

CONTACT TURCK FOR MORE INFORMATION

THIS DRAWING IS CONFIDENTIAL AND THE PROPERTY OF TURCK INC. USE OF THIS DOCUMENT WITHOUT WRITTEN PERMISSION IS PROHIBITED.

DRFT CBM | DATE 10/02/00
APVD | SCALE 1=1.5

UNIT OF MEASUREMENT
MILLIMETER [INCH]
DO NOT SCALE THIS DRAWING

TURCK INC
High Technology Sensors and Automation Controls
3000 CAMPUS DRIVE
MINNEAPOLIS, MN 55441
1-800-544-7769
(763) 553-7300
(763) 553-0708 fax
turck.com

DESCRIPTION: RSM-2RKM 57-KF

IDENTIFICATION NO.: U0141-001
REV: F

FILE: U0141-001
SHEET 1 OF 1

Approved 03/25/2016, work order #101104 by T.S.